MAXHUB XBoard V7 Series

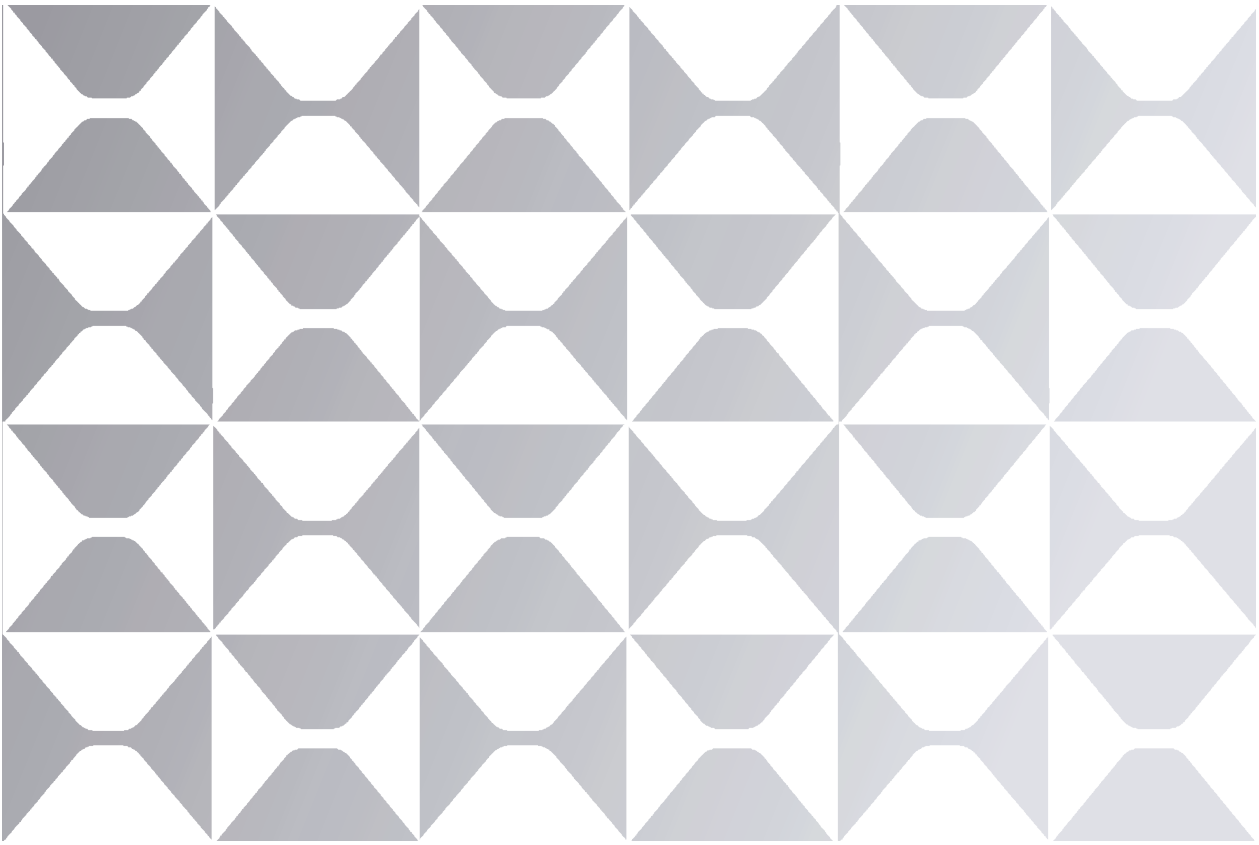

Quick Start Guide

MAXHUB

All the pictures in this manual are for reference only, subject to our available products.

TABLE OF CONTENTS

Contents ---------- 01

I. Unboxing Checklist ---------- 04

II. Installation Guide ---------- 04

1. Confirm the panel installation position ---------- 04

2. Steps to install the wall mount ---------- 05

3. Reference on wall mount ---------- 06

III. Installing the Wireless Module ---------- 07

IV. Installing the PC Module ---------- 08

V. Removing the PC Module ---------- 09

VI. Power On/Off ---------- 09

VII. Control Panel ---------- 10

1. Prepare to install ---------- 10

2. Terminal interface ---------- 11

IX. Bring Your Own Device ---------- 12

X. Frequently Connected Ports ---------- 13

XI. First Start of MAXHUB Interactive Display ---------- 14

XII. Maintenance ---------- 15

Thank you for choosing MAXHUB product.

To ensure that you are able to fully utilize the capabilities of the product, we ask that you please read this user manual carefully and thoroughly before using the device. Should you have any questions or require assistance, please do not hesitate to contact our technical support team for guidance.

⚠ Safety Warnings

Placement

(1) Please do NOT place the product on a slope, mount on an unstable stand or an insufficiently robust wall, a table nor a shelf.
(2) Please do NOT expose the product to direct sunlight or any other heat source.
(3) Please do NOT put the product near devices that generate strong magnetic fields.
(4) Remove water splashes immediately with a clean dry cloth.
(5) Please do NOT place any other heavy objects on the product.
(6) Please do NOT put the unit directly facing an air conditioning vent to avoid condensation inside the glass.

Power Supply

(1) Please check the product's operating voltage and frequency matches the local power configuration.
(2) Please unplug the device during storming or thundering weather.
(3) Please unplug the power should the product is left unused for long time.
(4) Please keep the power cable from physical or mechanical damage.
(5) Please use the original power cable from the accessory bag, don't modify or lengthen it.
(6) Please make sure the AC is grounded.
(7) This power cable comes with the device exclusively for this device only.
(8) Please do not abruptly interrupt the power supply or unplug the device while it is powered on to prevent any potential damage.

LCD Screen

(1) Do NOT use hard nor sharp objects on the screen other than MAXHUB stylus.
(2) Please unplug the power before cleaning the product. Please clean the screen with a soft, dustless and dry cloth.
(3) Please do NOT use water or liquid detergent to clean the product.
(4) Please contact the authorised reseller for thorough cleaning.
(5) Please do NOT display a high-brightness image on the screen for too long time.

Viewing Distance

For optimal viewing experience, it is recommended to position the commercial display at a distance that is 3-4 times the diagonal length of the screen.

Temperature & Humidity

(1) Please do NOT put the product near a heater nor a radioactive source.
(2) If the product is moved from a cold place to a warm one, please unplug the power cable and allow the product to gradually warm up for at least two hours to reduce the moisture.
(3) Operating temperature of the product is 0°C-40°C, operating humidity is between 0%-90%RH.
(4) avoid exposing the unit to rain or placing it in high humidity areas. Additionally, it is crucial to keep the unit in a dry and cool indoor environment.

Ventilation

Please ensure that the interactive flat panel is placed in an area with adequate ventilation to allow for proper heat dissipation. It is recommended to leave a minimum of 10cm of space on the left, right, and back of the device, and 20cm of space above it to ensure proper airflow and optimal performance.

Earphone

When using the earphones, it is important to be aware that prolonged listening at high volumes may cause temporary or permanent hearing loss. To prevent this, we strongly recommend turning down the volume before inserting the earphones into your ears.

Energy Saving

Please note that pressing the power button briefly will not fully shut down the interactive flat panel. Instead, it will enter standby mode, with only the screen turning off. To properly shut down the device, press and hold the power button for approximately 3 seconds and confirm the shut down command that appears on the center of the screen.

Notes for Cleaning

Please do not block or cover the heat vents on the back panel and do not spray liquids on the device.

Power Switch Status Signs

"I" means power on, "O" means power off.

Maintenance

Please contact authorised reseller for maintenance or repairing.

⚠ Warranty Exclusions

MAXHUB does not warranty Products that match any one or few of the following descriptions:

(1) Product damage caused by violating the user manual.
(2) Hardware damage caused by improper setup.
(3) Product damage caused by unauthorised modification or maintenance.
(4) Product damage caused by using in an unsuitable environment.
(5) Product damage caused by abnormal external force.
(6) Product damage caused by natural disasters or other force majeure.
(7) Damaged Warranty Sticker.
(8) Unable to provide effective purchase certificate.

I. Unboxing Checklist

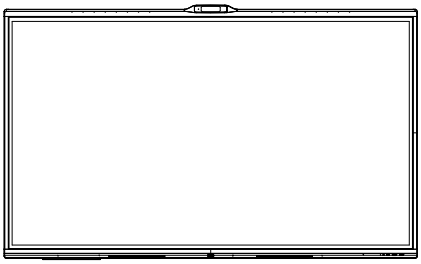

Interactive Display x1

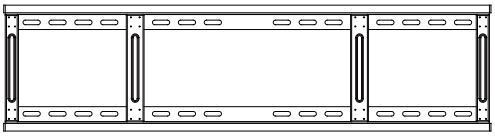

Wall Mounting ×1

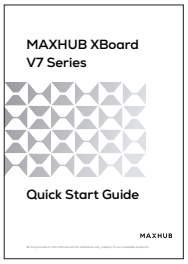

Quick Start Guide×1

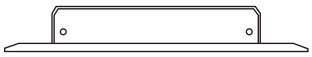

The Wireless Module×1

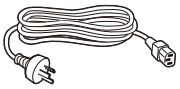

Power Cord*

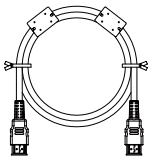

HDMI Cable (1.5M)×1

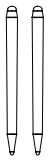

Passive Stylus×2

Note:【*】Power cord could be different for different regions , pls refer to the actual product.

II. Installation Guide

1. Confirm the panel installation position.

Align the wall-mounted screw holes with the studs on the back panel and fasten with 2 wall-mounted strips.
First, fasten the screws on the top side, then fasten the screws on the bottom side. A total of four screws are required.
Refer to the table below for the position of the lock hole.

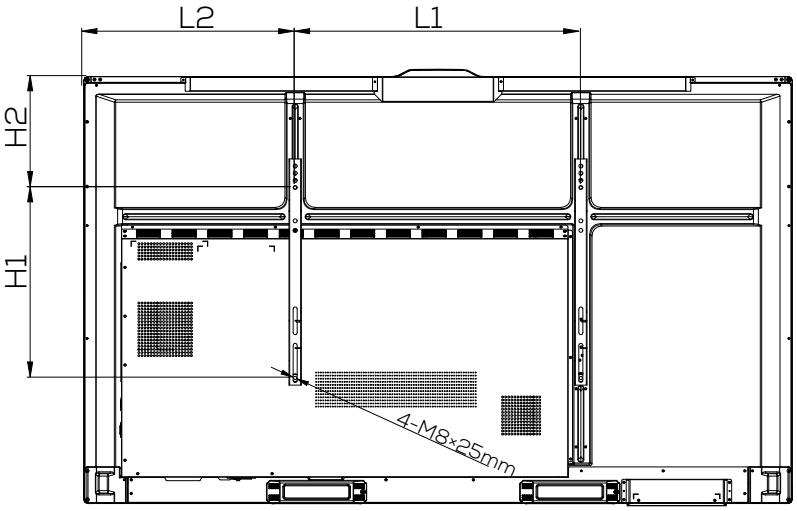

Series	V7 Series			
Dimension	55 - WIB6540A	65 - WIB9060H	75 - WIB9060H	86 - WIB9060H
L1	400 mm	600 mm	800 mm	800 mm
L2	434.8 mm	444.2 mm	454.7 mm	578.5 mm
H1	200 mm	400 mm	400 mm	600 mm
H2	280.9 mm	233.2 mm	212.3 mm	300.2 mm

2. Steps to install the wall mount

❶ Take out the wall mount plate accessory package from the accessory box.

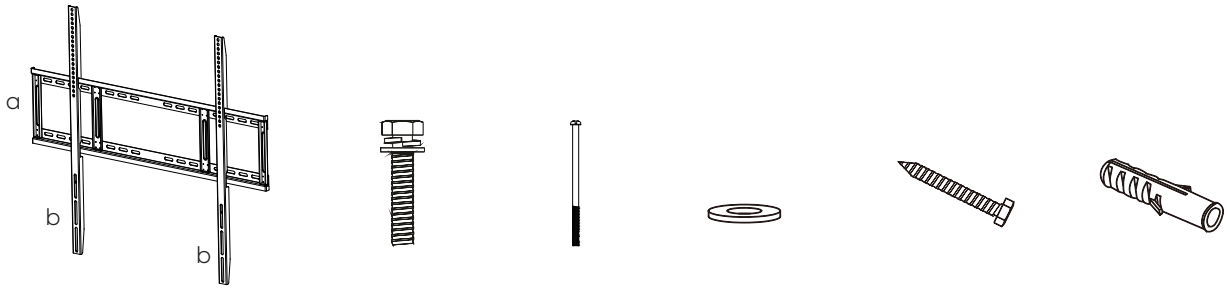

a-1pcs / b-2pcs | c-4pcs | d-2pcs | e-8pcs | f-8pcs | g-8pcs

❷ Take the panel out of the box and place it on a soft surface, such as a mat, to protect it during installation.

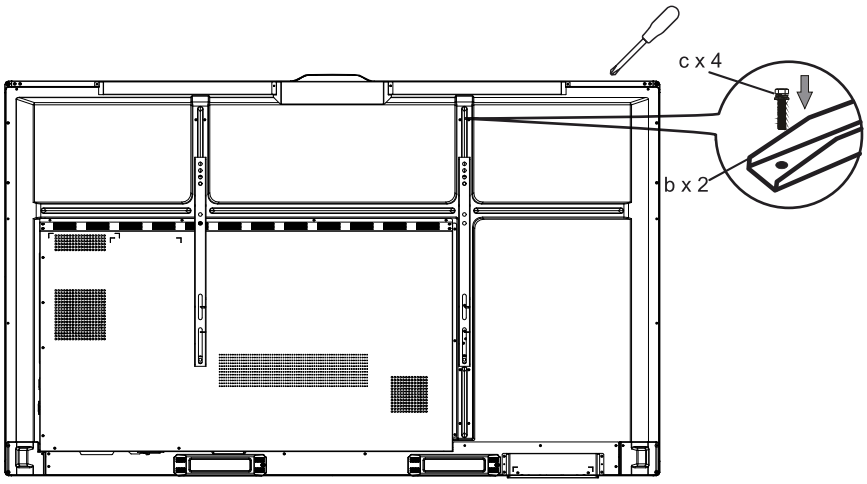

❸ Take 8 pcs of expansion rubber plug g and screw it into the wall.

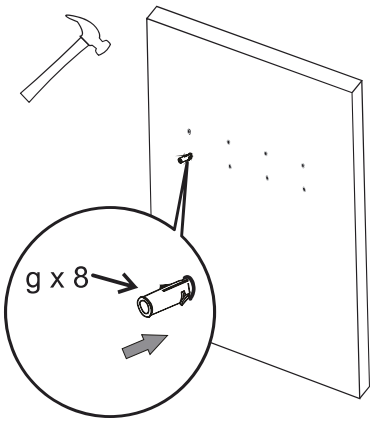

❹ Fix the wall bracket on 8 pcs expansion plug g with a combination of 8 pcs screw e and gasket f.

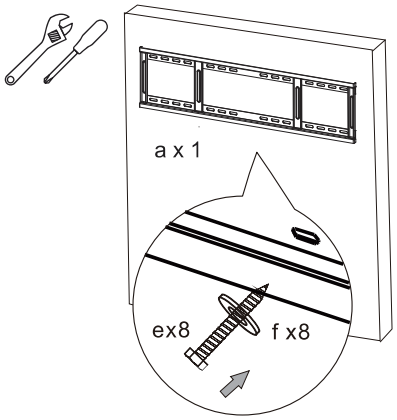

5 Hang the panel vertically on the bracket, keep the panel in the center of the bracket.

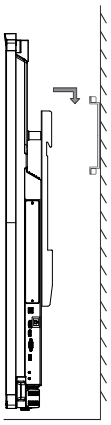

6 Tighten the safety screw counter-clockwise to make the top of screw reach the second screw hole.

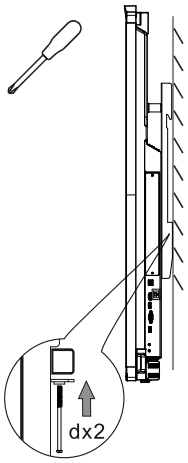

3. Reference on wall mount

When planning for wall mounting, it is important to take into consideration the physical dimensions of the panel.
To ensure ease of use, it is recommended to maintain a proper distance between the wall and the back of the panel.

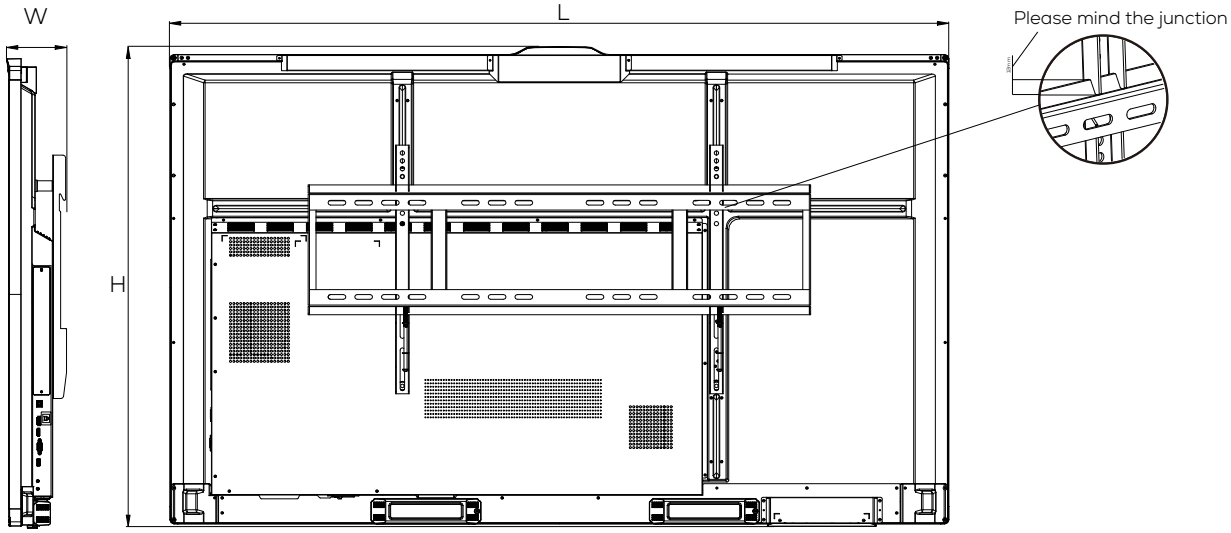

Series	V7 Series			
Dimension	55"	65"	75"	86"
L	1269.5 mm	1488 mm	1709.4 mm	1957 mm
H	792.9 mm	914 mm	1040.3 mm	1180.1 mm
W	130.5 mm	117 mm	117 mm	130 mm

NOTE: The table and diagram are only for reference.

III. Installing the Wireless Module

Please make sure that the following items are ready before setting up the wireless module.

1 × Interactive Flat Panel

1 × Wireless Module

⚠ Please make sure the power cord of the Interactive Flat Panel is disconnected before installation.

Step1: Remove the Mylar strip on the bottom of the interactive flat panel. Use a Phillips screwdriver toloosen two screws and remove the cover.

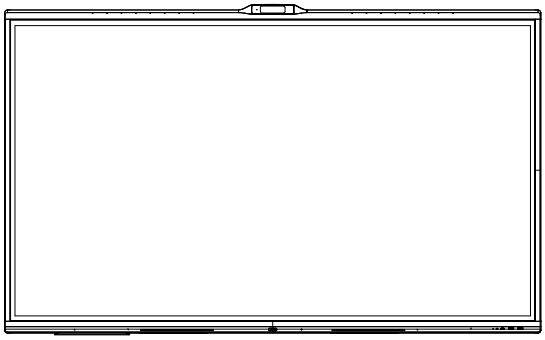

Step2: Insert the wireless module into the wireless module slot and screw it up.

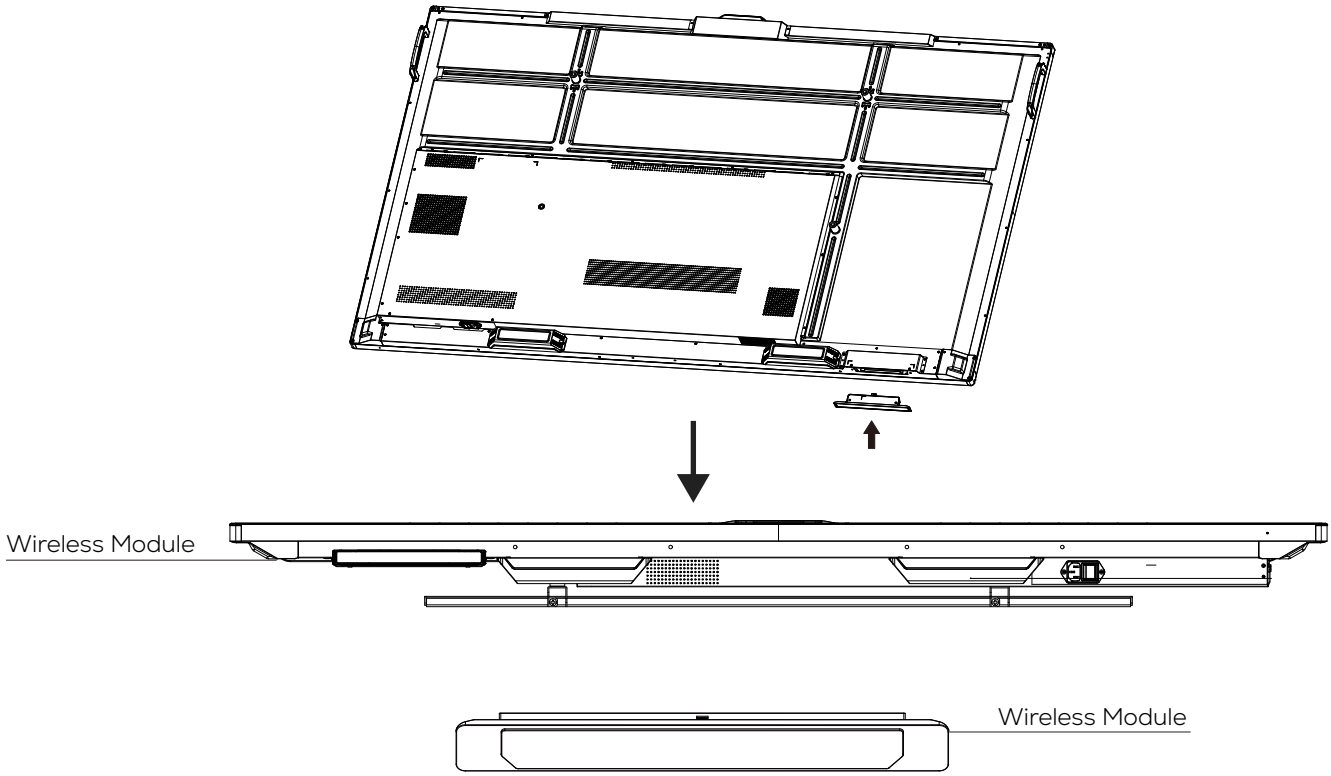

Note: This Wireless Module only works for the Interactive Flat Panel by plugging it into the above slot.

IV. Installing the PC Module

⚠ Please make sure the power cord of the Interactive Flat Panel is disconnected before installation.

Step1: Unscrew and remove the cover.

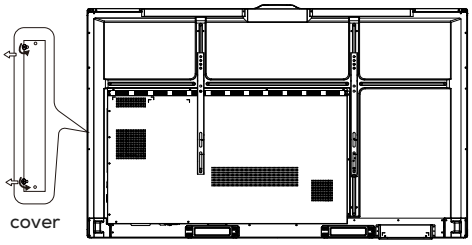

Step2: Prepare the PC module.

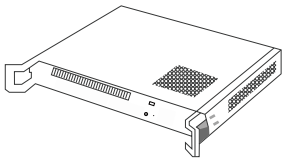

PC module

Step3: Align the PC module with the slot in the correct orientation.

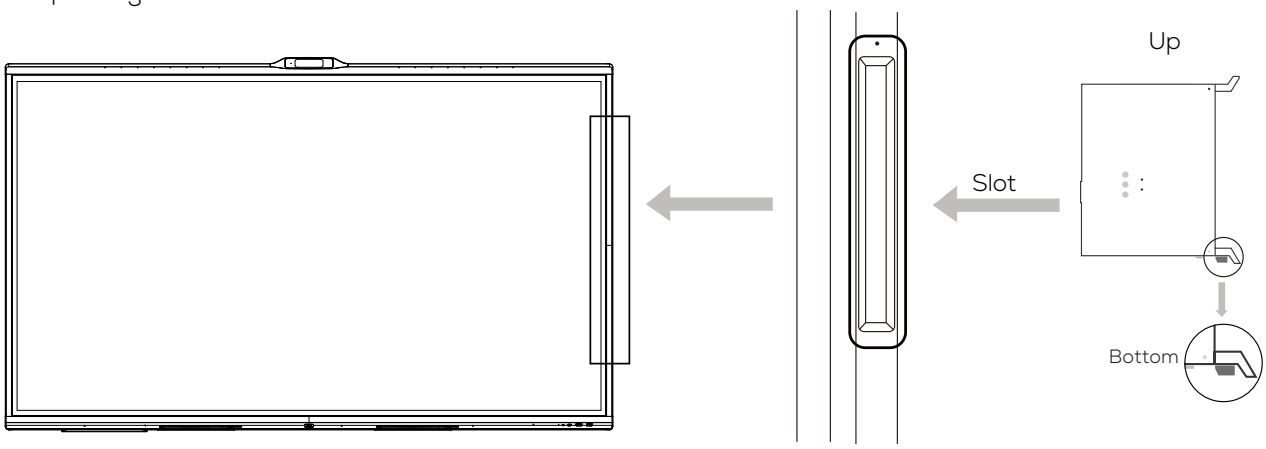

Step4: Installation of PC module.

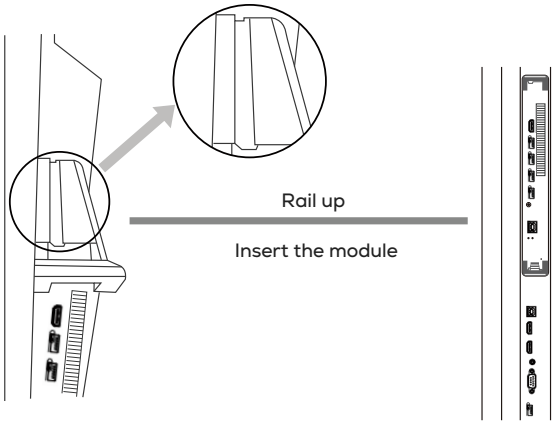

V. Removing the PC Module

⚠ Please make sure the power is off before proceeding with the removal.

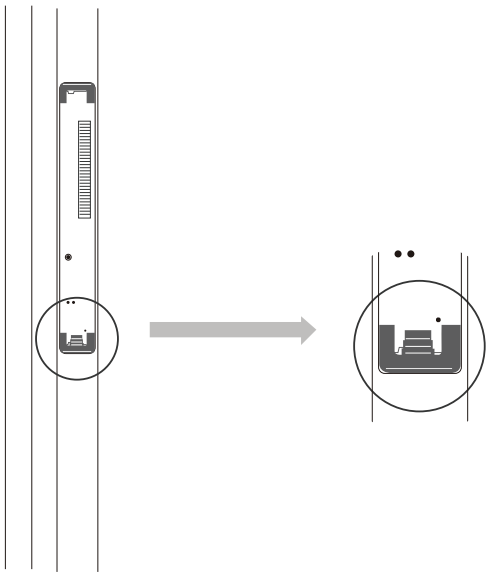

To remove the module, loosen the screws and release the lock.

VI. Power On/Off

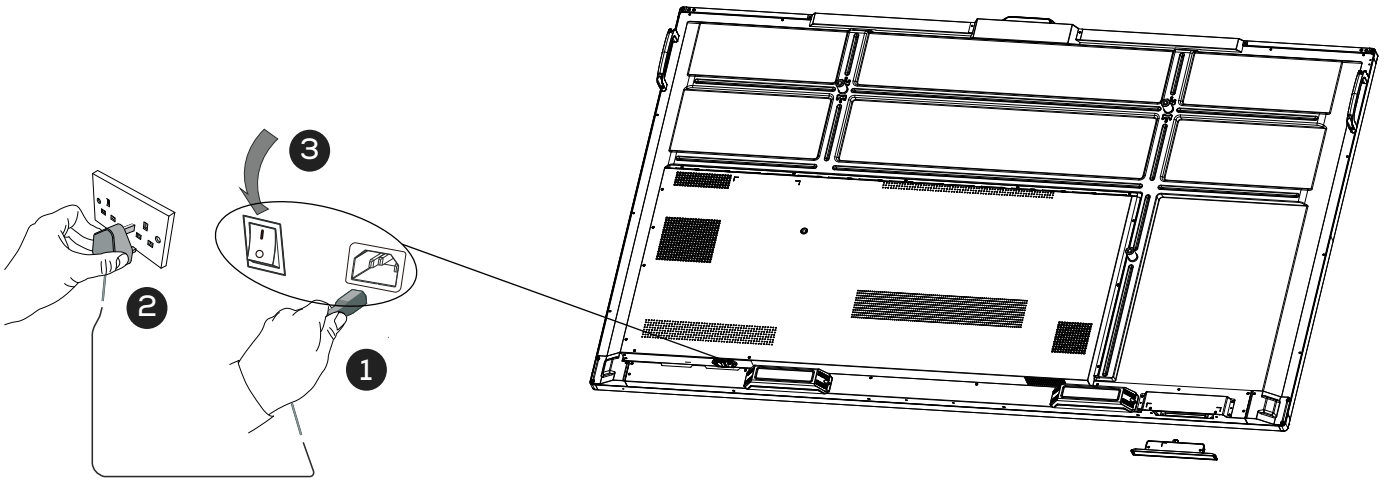

1. Plug the power cable into the power socket of the product.
2. Plug the power cable into the power supply.
3. Flip the rocker switch and press the power button. The indicator light will turn white when the product is powered on.

VII. Control Panel

To ensure the proper functioning of the product, it is important to keep it free of dust and moisture. Regular cleaning with a soft, dust-free, and dry cloth is recommended. Remember to unplug the product before cleaning.

1. Prepare to Install

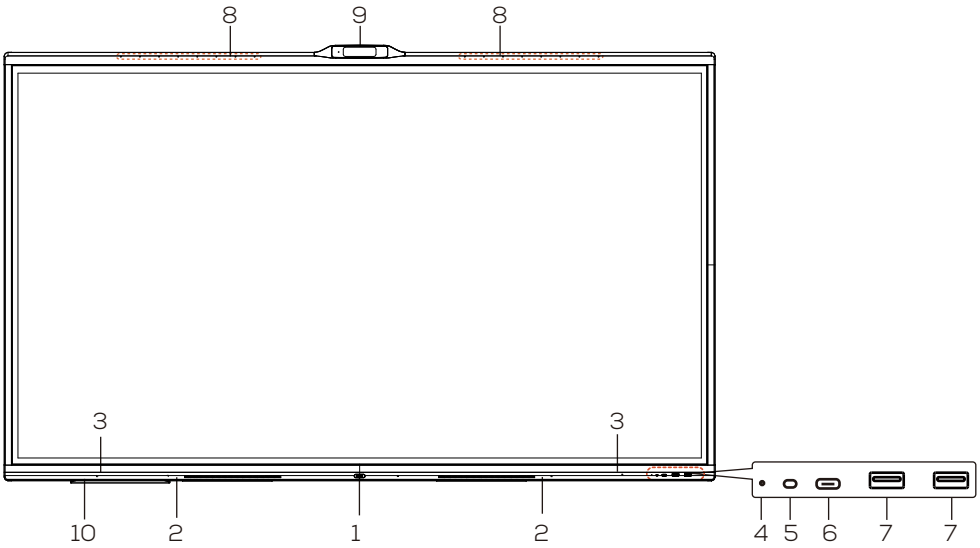

No.	Items	Function description
1	⏻ Power Button (with indicator)	1. In standby mode, short press the power button to switch from standby to power on. 2. In power on mode, short press the power button to switch from power on to power saving. 3. In power on mode, long press the power button for more than 2 seconds to switch from power on to standby.
2	Loudspeaker	Sound output
3	Magnetic zone	Area for placing the absorptive magnetic pen
4	Remote control signal receiver	Receive the remote signal
5	Light sensor	Identify the brightness of ambient light
6	USB Type-C	1. Supports DP signal input. 2. USB 2.0, TYPE--C 5V ⎓0.5A. 3. Supports screen share dongle pairing. 4. BYOD (Bring Your Own Device)
7	3.0	1. Connect USB devices such as mobile hard disk, U disk, USB keyboard, mouse, USB drives, etc. 2. USB 3.0 5V ⎓0.9A
8	Microphone	Audio Capture Function
9	Camera	Video Capture Function
10	Wi-Fi module	Pluggable Wireless Module

2. Terminal Interface

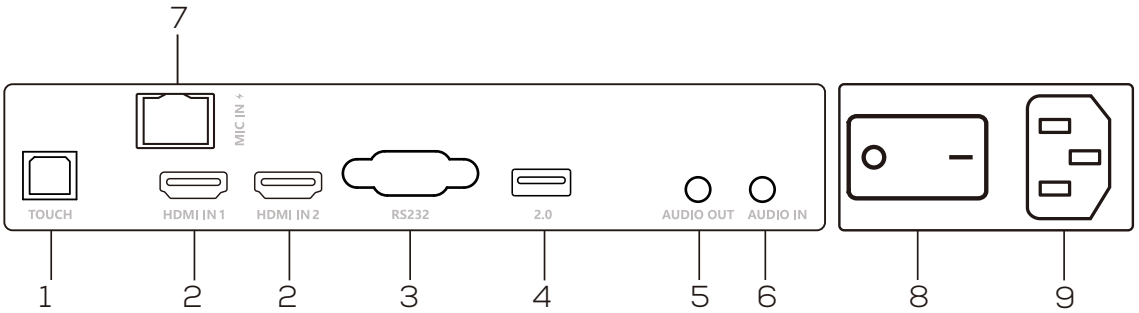

No.	Items	Function description
1	TOUCH	Supports being connected to call camera, microphone, speaker, and touch panel for additional functionality.
2	HDMI IN1/2	High-definition multimedia interface signal input, connect to devices with HDMI output interface (personal computer with HDMI output, set-top box, or another video device).
3	RS232	Serial interface, used for mutual transfer of data between devices.
4	2.0	5V ⎓ 0.5A. Connect USB devices such as mobile hard disk, U disk, USB keyboard, mouse, USB drives, etc.
5	AUDIO OUT	Audio output to the external speaker.
6	AUDIO IN	External audio sources input.
7	MIC IN	Supports RJ45 audio input, desktop microphone cascading, and 30W POE power supply.
8	AC SWITCH	To open or shut down AC power supply. “I” means power on, “O” means power off.
9	AC IN	AC power input, connecting AC power supply.

IX. Bring Your Own Device

Function:

1.Wired Screen Share from your laptop to the display

2.Control your laptop from the touch display

3.Access to the display's camera/speaker/Microphone from your laptop

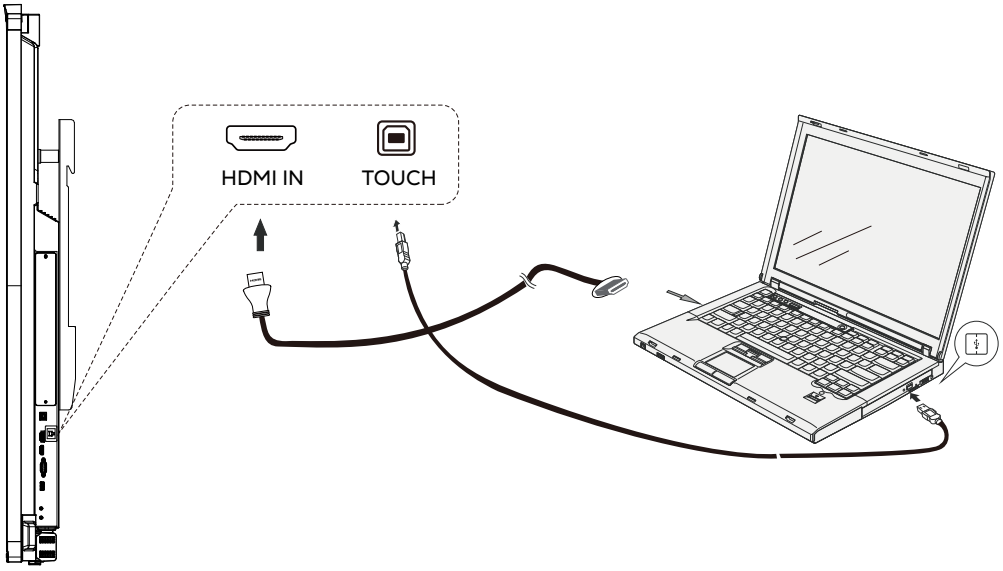

2. Through USB Type-C

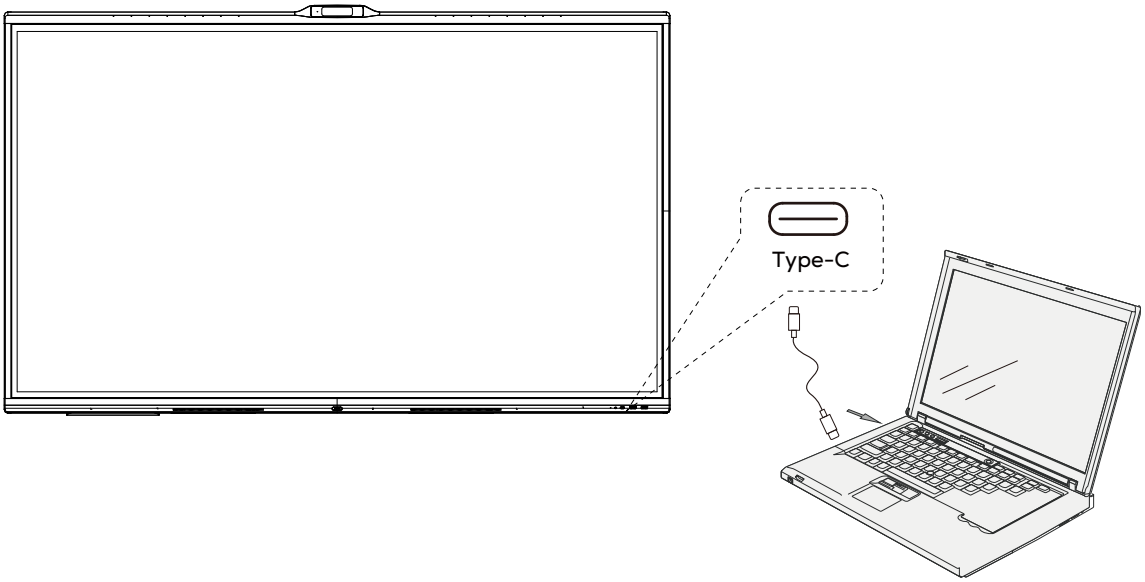

X. Frequently Connected Ports

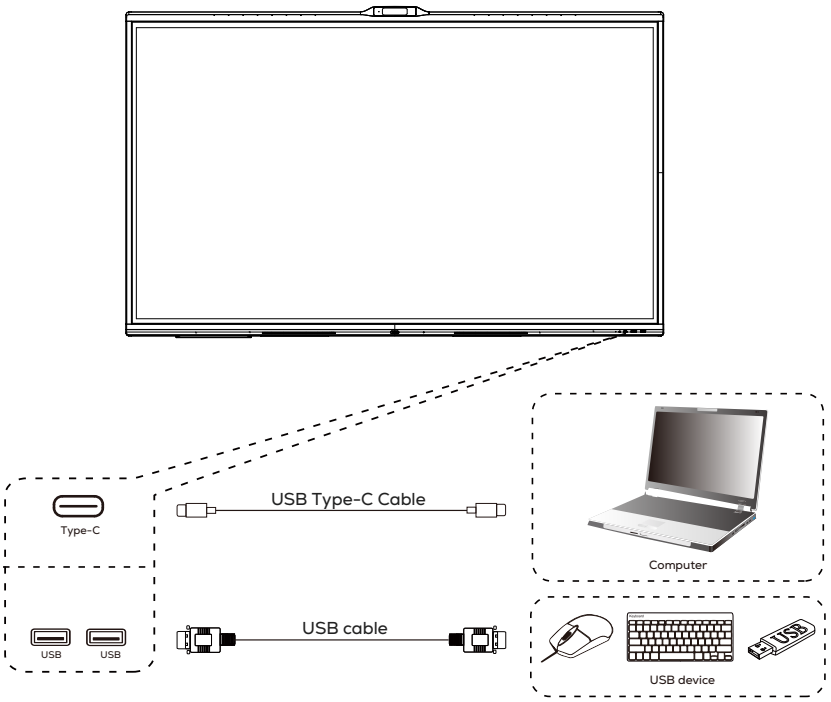

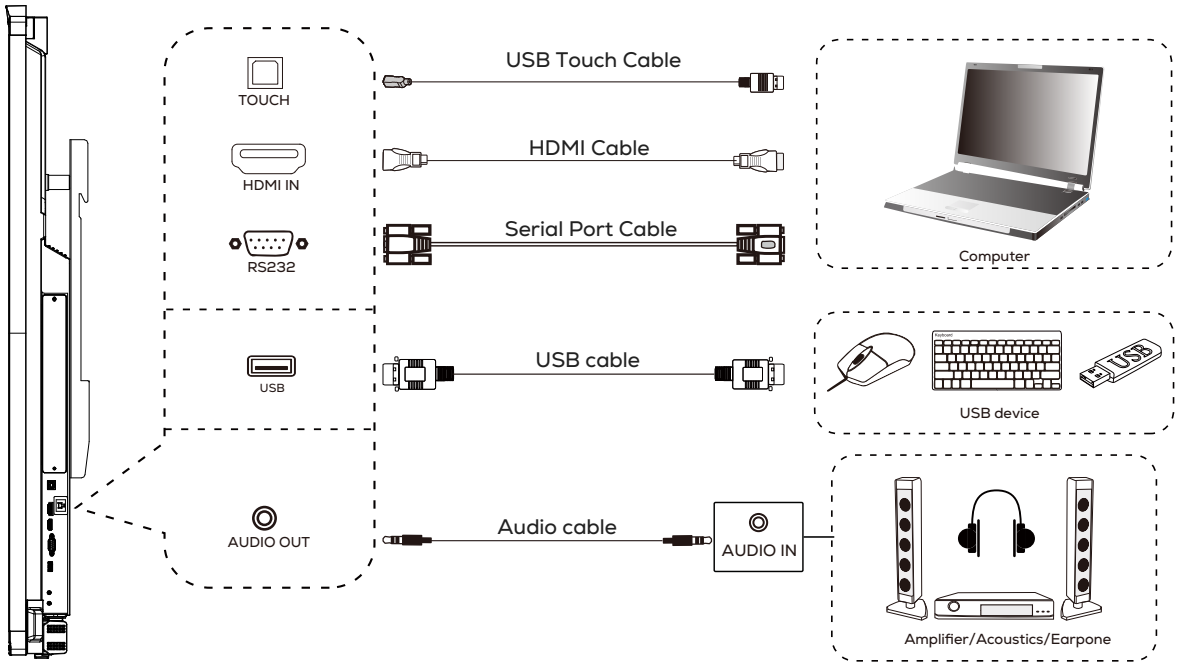

XI. First Start of MAXHUB Interactive Display

To start the MAXHUB V7, press the power key. Once the device is on, it is ready for use with all of its features.

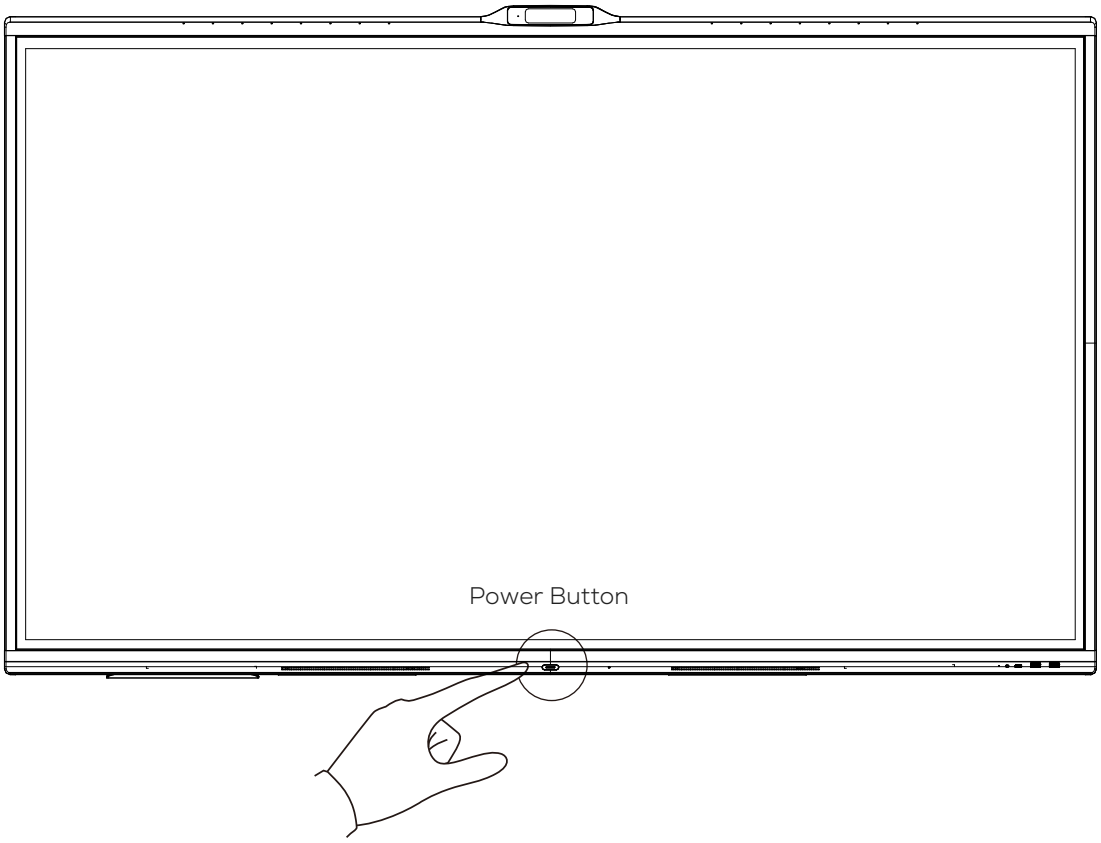

XII. Maintenance

To ensure the proper functioning of the product, it is important to keep it free of dust and moisture.
Regular cleaning with a soft, dust-free, and dry cloth is recommended. Remember to unplug the product before cleaning.

Cleaning the Screen

1. Please dissolve the fabric softener or detergent in 75% alcohol.
2. Please use a piece of soft cloth and soak it with the solution.
3. Take out the cloth and squeeze it dry before wiping on the screen.

Cleaning the Touch Frame

Please choose dry, soft and dust-free wipes to clean the touch frame.

Unplug Power

To protect the device during stormy weather or when it will not be in use for an extended period of time, it is recommended to unplug the power.

FCC Statement

This equipment has been tested and found to comply with the limits for a Class B digital device, pursuant to part 15 of the FCC Rules. These limits are designed to provide reasonable protection against harmful interference in a residential installation. This equipment generates,uses and can radiate radio frequency energy and, if not installed and used in accordance with the instructions, may cause harmful interference to radio communications. However, there is no guarantee that interference will not occur in a particular installation. If this equipment does cause harmful interference to radio or television reception, which can be determined by turning the equipment off and on, the user is encouraged to try to correct the interference by one or more of the following measures:
-Reorient or relocate the receiving antenna
-Increase the separation between the equipment and receiver.
-Connect the equipment into an outlet on a circuit different from that to which the receiver is connected
-Consult the dealer or an experienced radio/TV technician for help.

FCC Warning

This device complies with Part 15 of the FCC Rules. Operation is subject to the following two conditions:
(1) this device may not cause harmful interference, and (2) this device must accept any interference received, including interference that may cause undesired operation.
Changes or modifications not expressly approved by the party responsible for compliance could void the user's authority to operate the equipment.

Hereby, Guangzhou Shirui Electronics Co., Ltd. declares that the this product is compliant with the essential requirements. The complete Declaration of Conformity may be requested through the following postal address:
MAXHUB EUROPE B.V.
BEURSPLEIN 37, 3011AA ROTTERDAM, NETHERLANDS

This symbol, affixed to the product or its packaging, indicates that the product must not be processed with household waste. It must be brought to an electric and electronic waste collection point for recycling and disposal. By the appropriate disposal of this product you also help in preventing potentially negative consequences for the environment and human health. The recycling of materials helps preserve our natural resources. For further information regarding the recycling of this product, please contact your municipality, local waste disposal centre or the store where the product was purchased.

HDMI™
HIGH-DEFINITION MULTIMEDIA INTERFACE

NOTICE: The terms HDMI and HDMI High-Definition Multimedia Interface, and the HDMI Logo are trademarks or registered trademarks of HDMI Licensing LLC in the United States and other countries.

ENERGY STAR is a U.S. Environmental Protection Agency voluntary program that helps businesses and individuals save money and protect our climate through superior energy efficiency. Products that earn the ENERGY STAR prevent greenhouse gas emissions by meeting strict energy efficiency criteria or requirements set by the U.S. Environmental Protection Agency.
The following logo appears on all ENERGY STAR-certified models:
This product qualifies for ENERGY STAR in the "Standard mode" setting and this is the setting in which power savings will be achieved. Changing the Standard mode picture settings or enabling other featureswill increase power consumption that could exceed the limits necessary to qualify for ENERGY STAR rating.
Refer to EnergyStar.gov for more information on Energy Star program.

ENERGY STAR
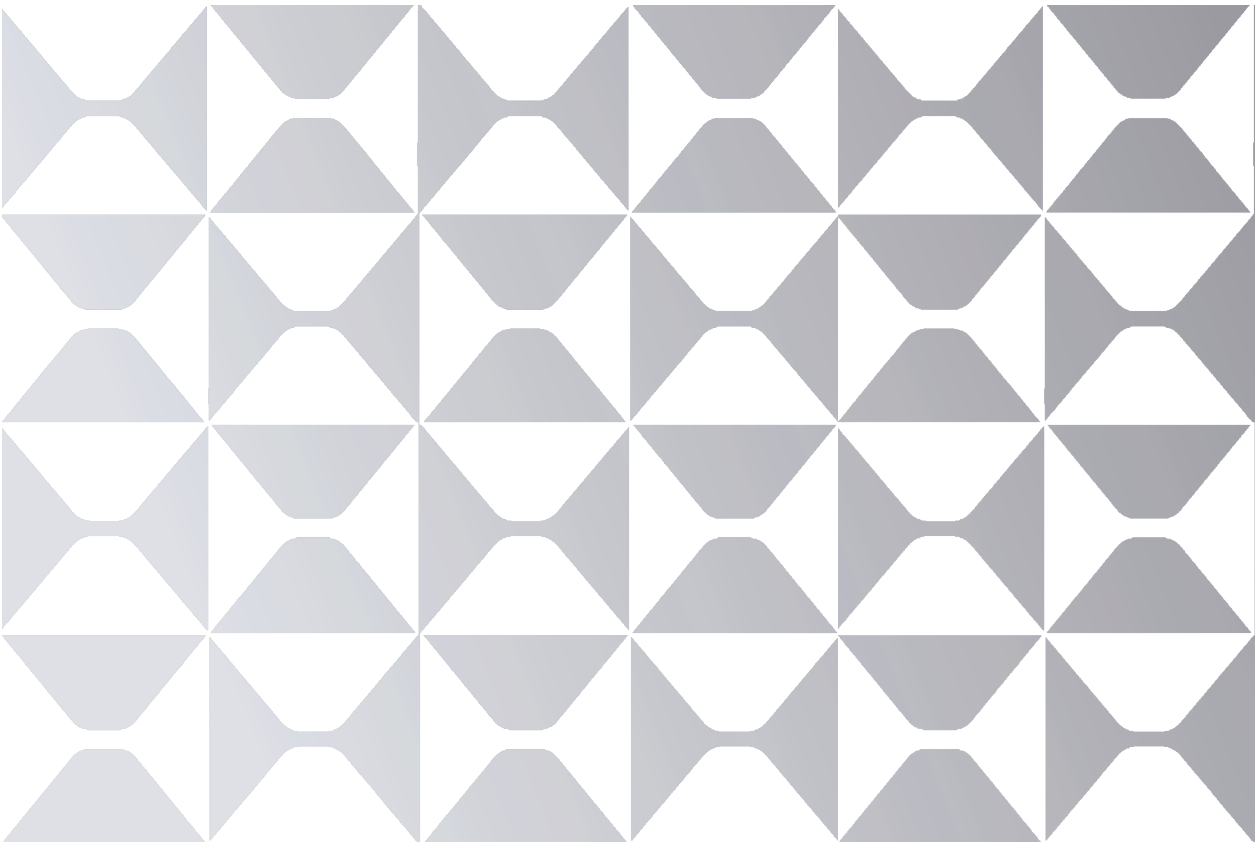
MAXHUB